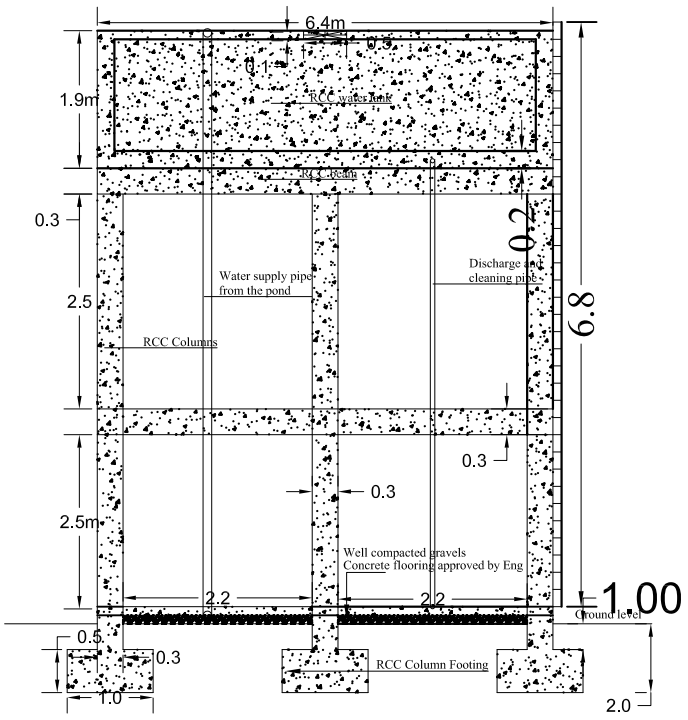

Column: Plan and Section

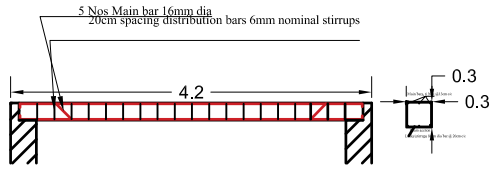

Beam: Section

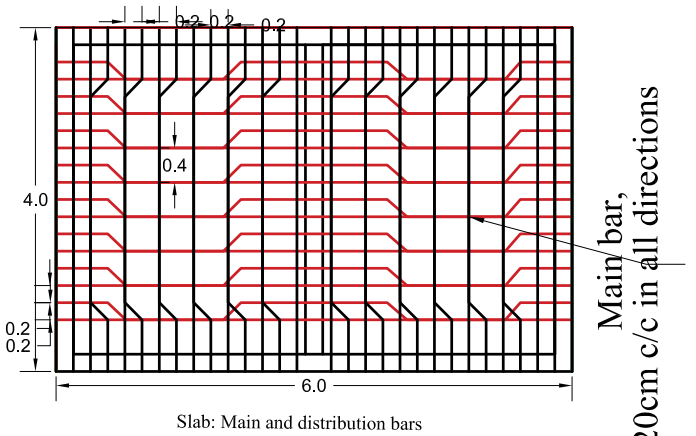

Slab: Main and distribution bars

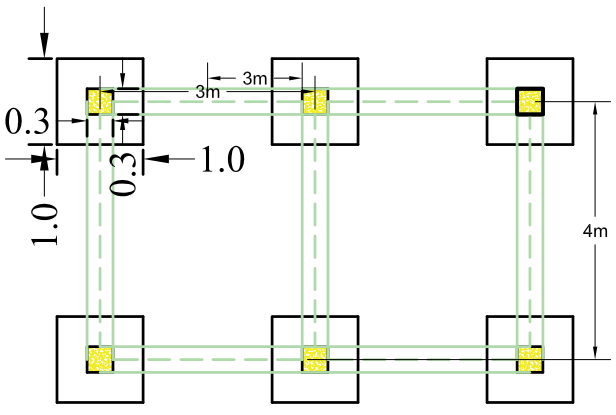

Footing plan: Top view

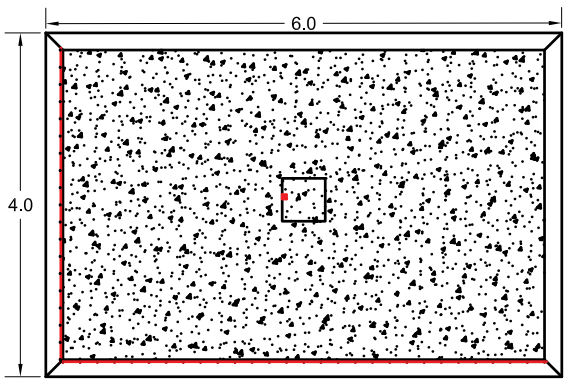

Slab plan: Top view

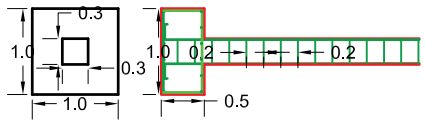

Column: Plan and Section

ACTIVITY	PROPOSED PLAN		DESIGNED BY	PROJECT	DATE
ELEVATED WATER TANK			ENG. ABDI MURUQLIQE	SFD	20/11/2026
CLIENT-	DRAWING NO.	SCALE	DRAWN BY	CHECKED BY	REVISION
QALOCATO COMMUNITY	01	1:100	ENG. MURUQ MoWD Somaliland	Titus	00

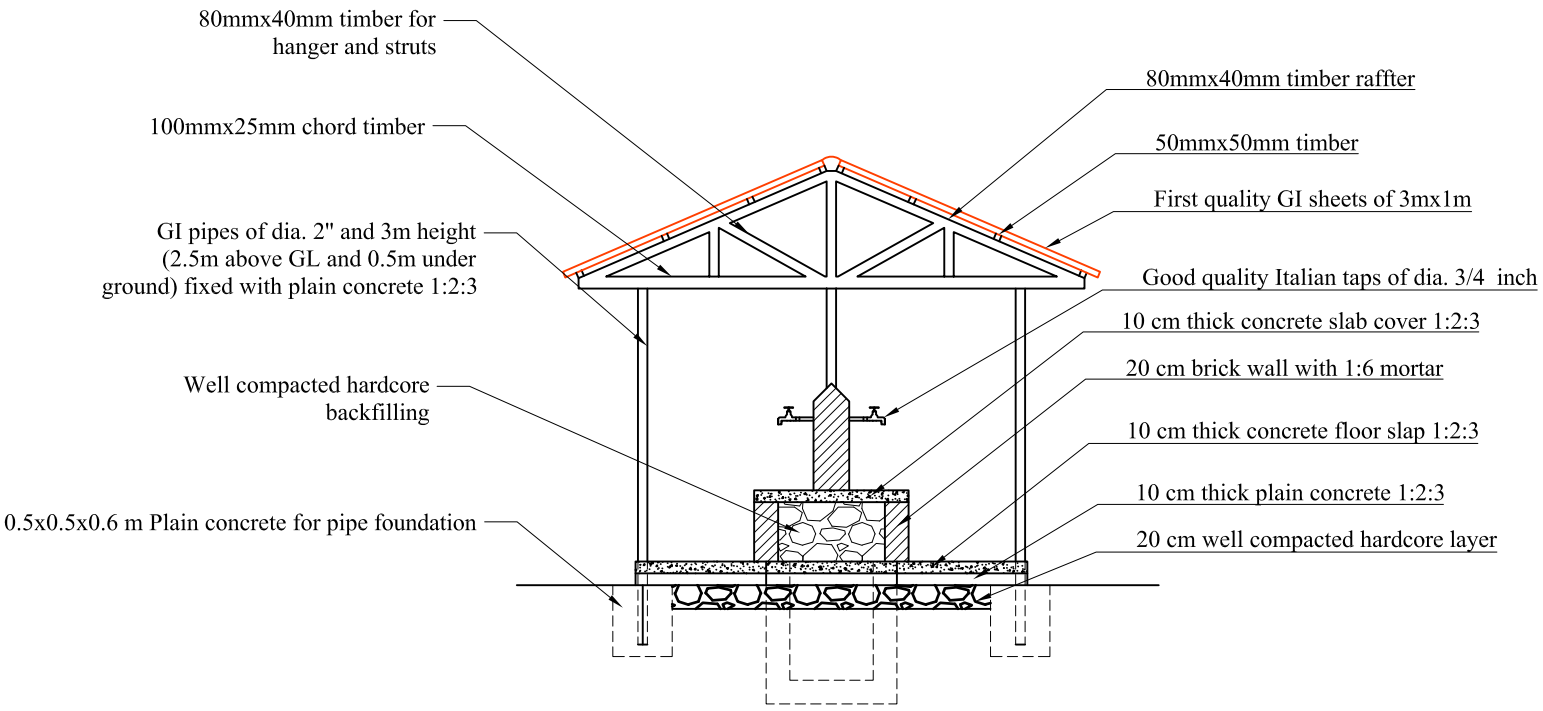

kiosk: B-B x-section

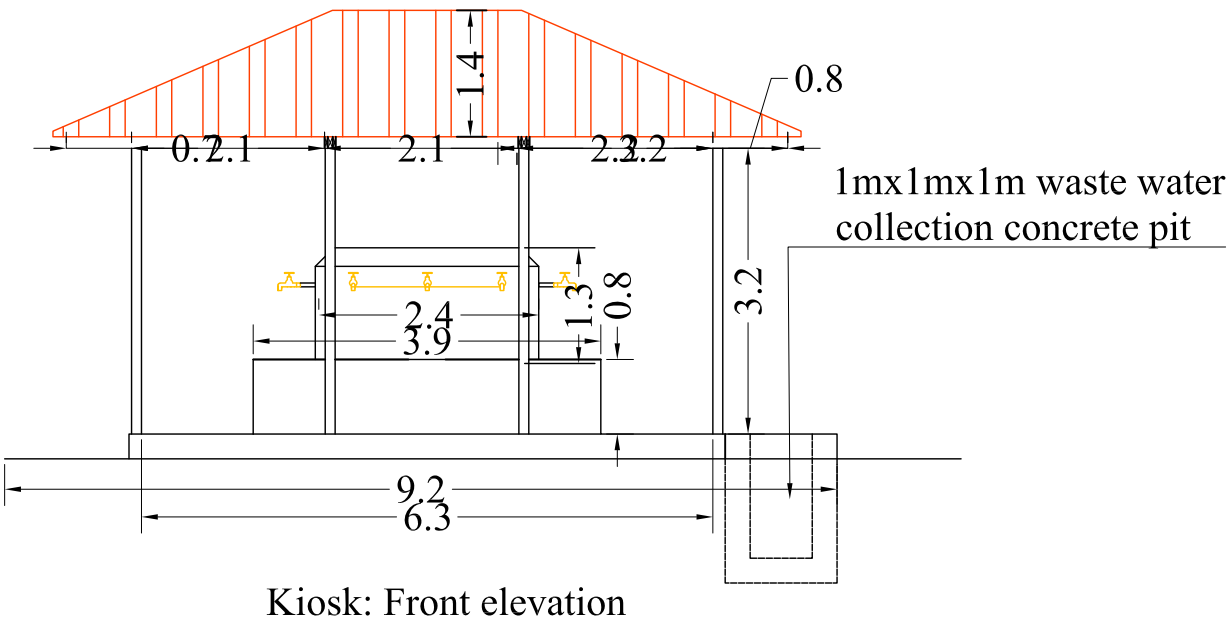

Kiosk: Front elevation

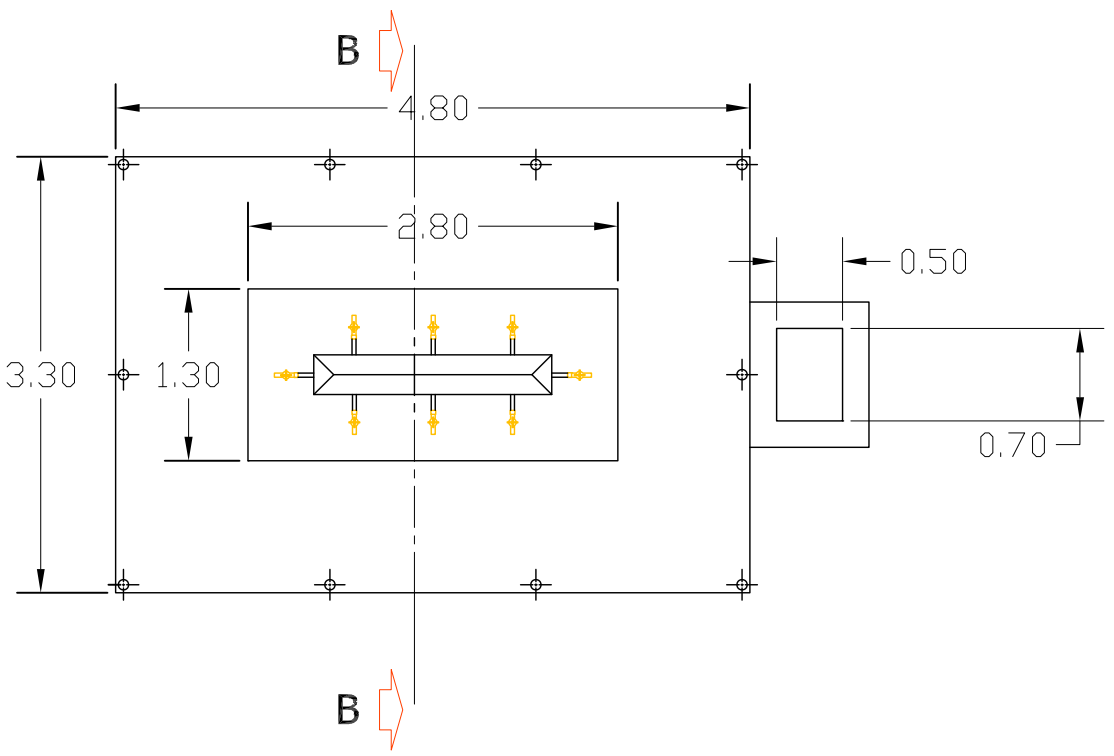

Kiosk: Plan view

ACTIVITY	PROPOSED PLAN		ENG. ABDI MURUQLIQE	PROJECT	20/11/2026
Kiosk				SFD	
CLIENT-	RAWING NO.	SCALE	ENG. MURUQ MoWD Somaliland	CHECKED BY	REVISION
QALOCATO COMMUNITY	01	1:100		Titus	00

ACTIVITY	PROPOSED PLAN		DESIGNED BY	PROJECT.	DATE
CAMEL TROUGH			ENG. ABDI MURUQLIQE	SFD	20/11/2026
CLIENT-	DRAWING NO.	SCALE	DRAWN BY	CHECKED BY	REVISION
QALOCATO COMMUNITY	01	1:100	ENG. MURUQ MoWD Somaliland	Titus	00

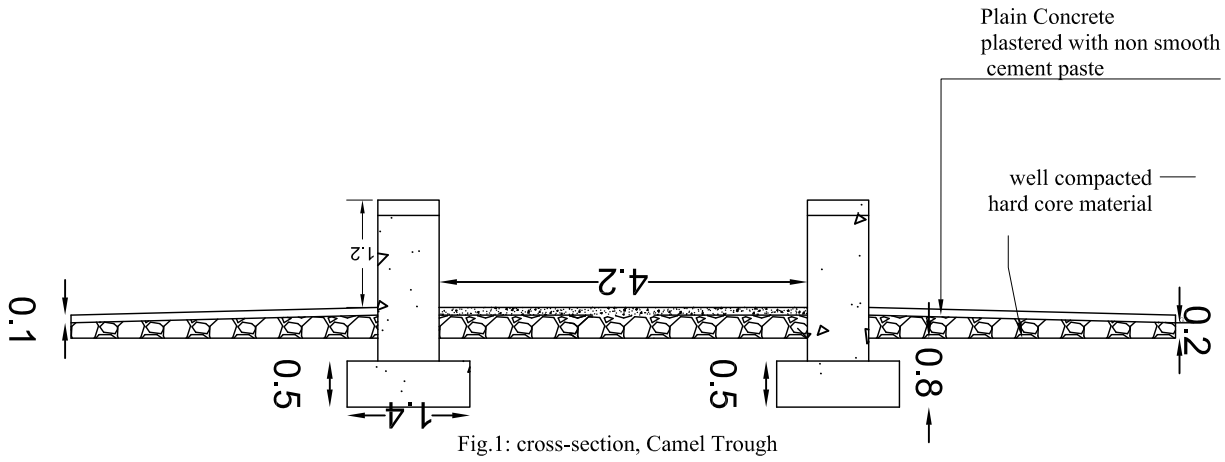

Fig.1: cross-section, Camel Trough

Fig. 1: Plan view: Camel trough

Fig.4: Side view, Camel Trough

Fig.3: Front view, Camel Trough

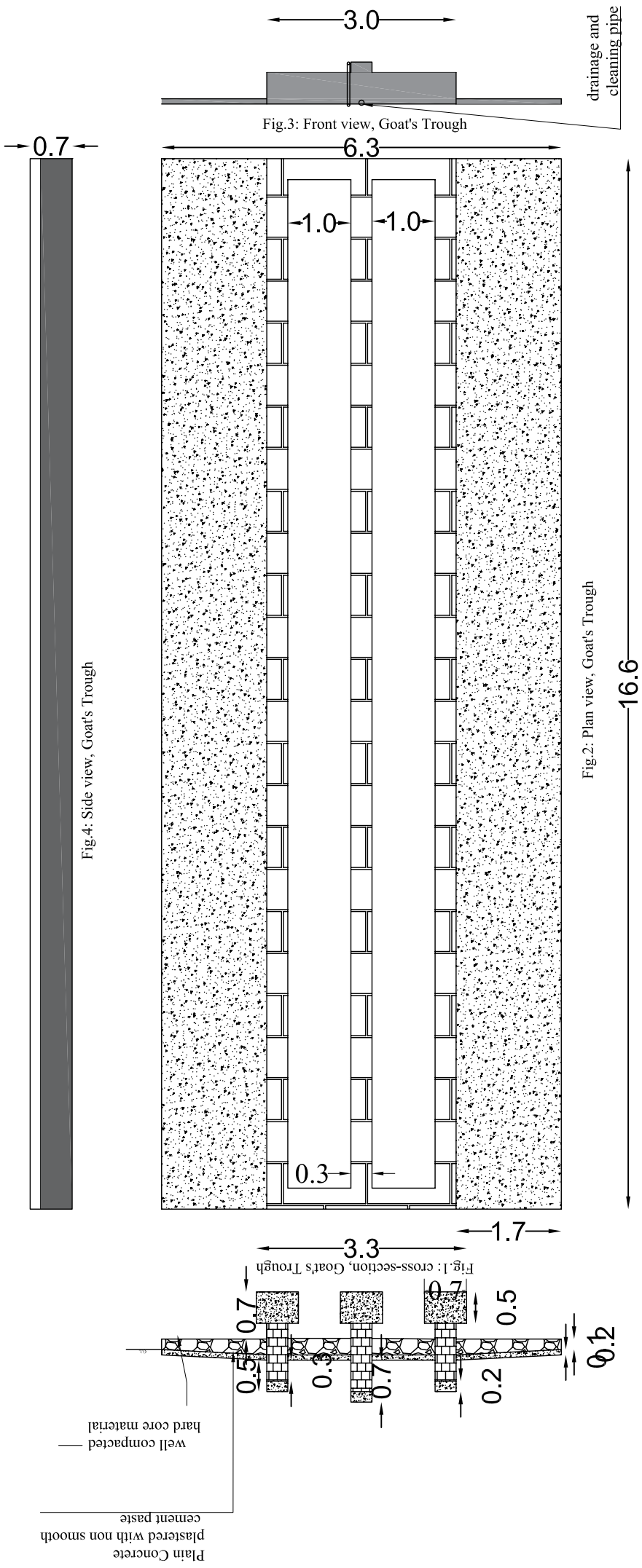

Fig.3: Front view, Goat's Trough

Fig.4: Side view, Goat's Trough

Fig.2: Plan view, Goat's Trough

Fig.1: cross-section, Goat's Trough

ACTIVITY	PROPOSED PLAN		DESIGNED BY	PROJECT	DATE
GOAT AND SHIP TROUGH			ENG. ABDI MURUQLIQE	SFD	20/11/2026
CLIENT-	DRAWING NO.	SCALE	DRAWN BY	CHECKED BY	REVISION
QALOCATO COMMUNITY	01	1:100	ENG. MURUQ MoWD Somaliland	Titus	00

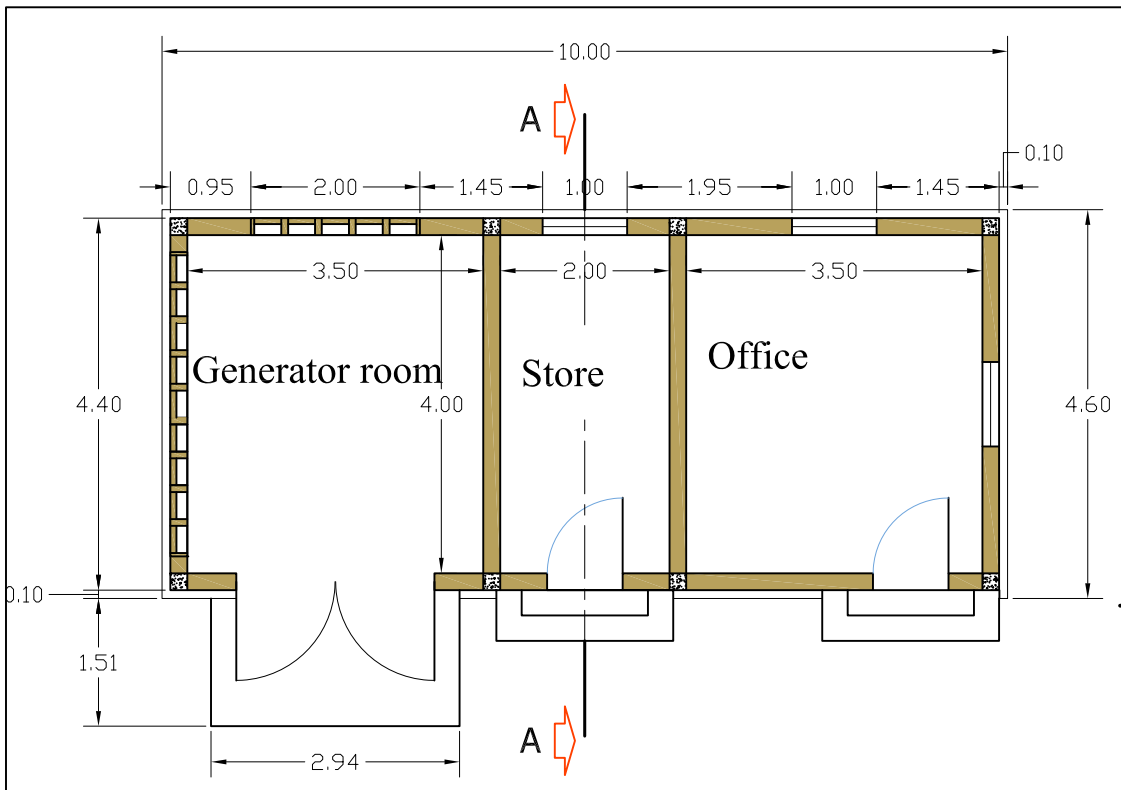

Building: Plan view

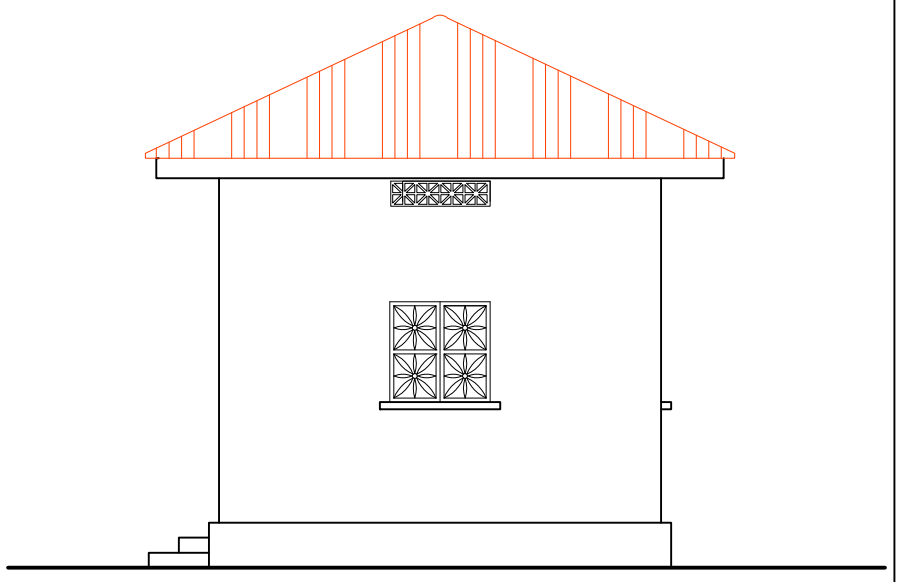

Building: Side Elevation

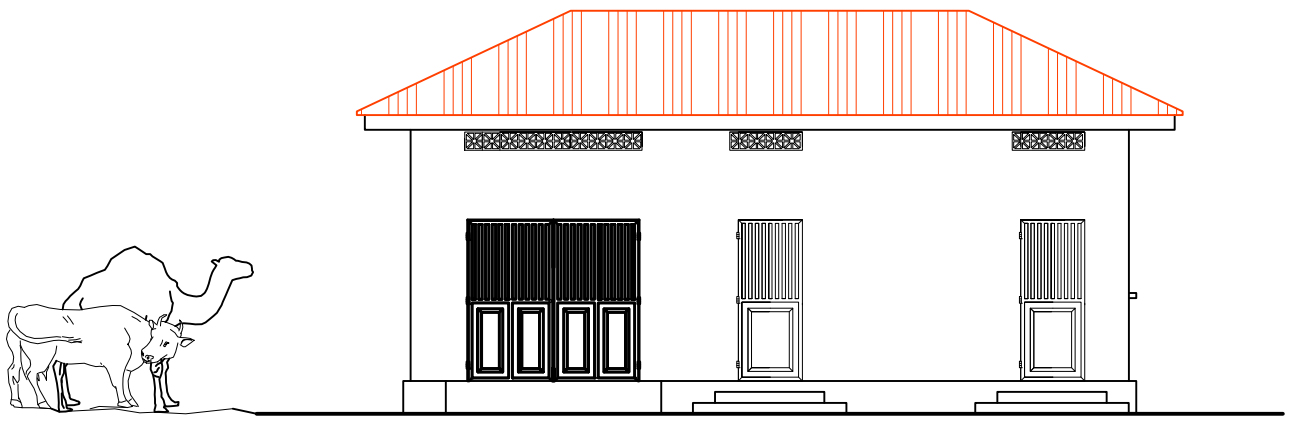

Building: Front Elevation

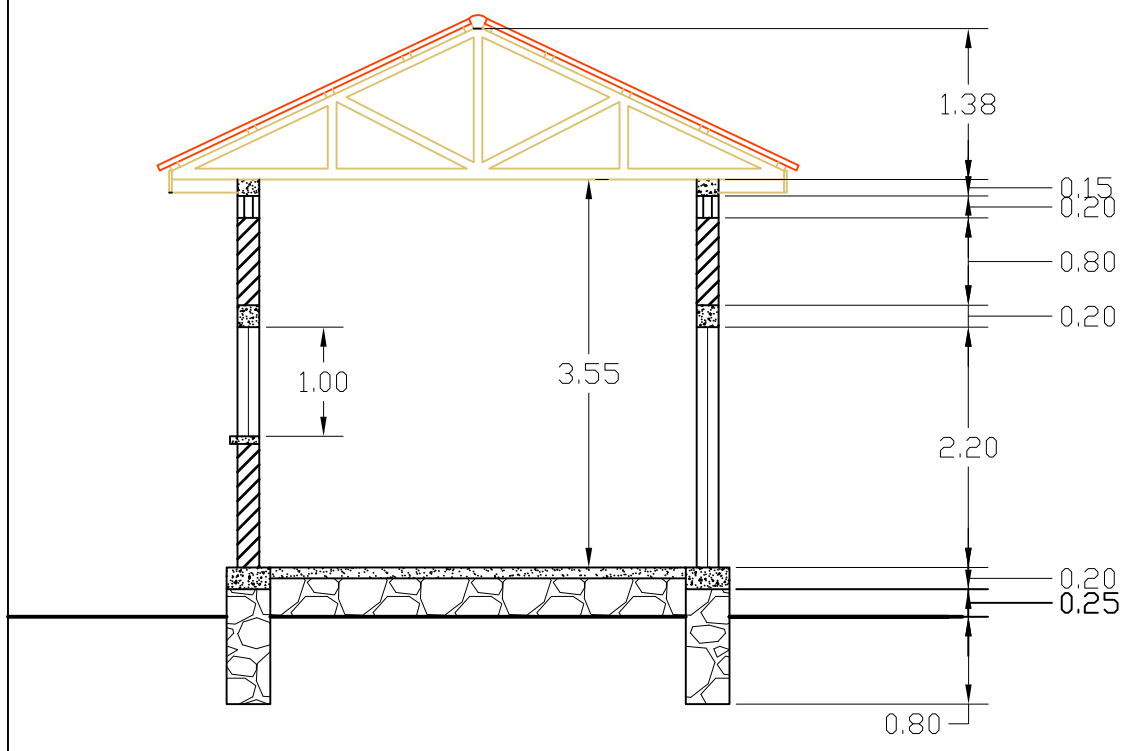

Building:Section elevation

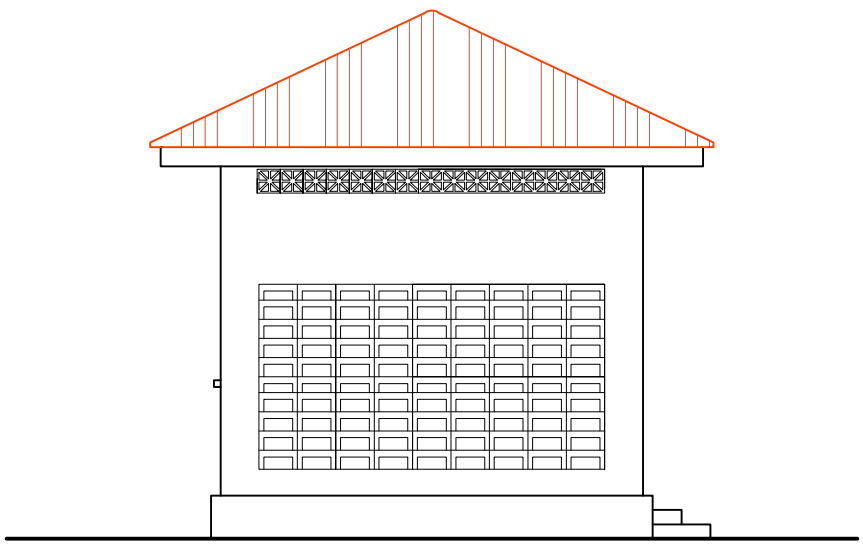

Building: Side Elevation

ACTIVITY	PROPOSED PLAN		DESIGNED BY ENG. ABDI MURUQLIQE	PROJECT	DATE 20/11/2026
Generator Room				SFD	
CLIENT-	DRAWING NO.	SCALE	ENG. MURUQ MoWD Somaliland	CHECKED BY	REVISION
QALOCATO COMMUNITY	01	1:100		Titus	00

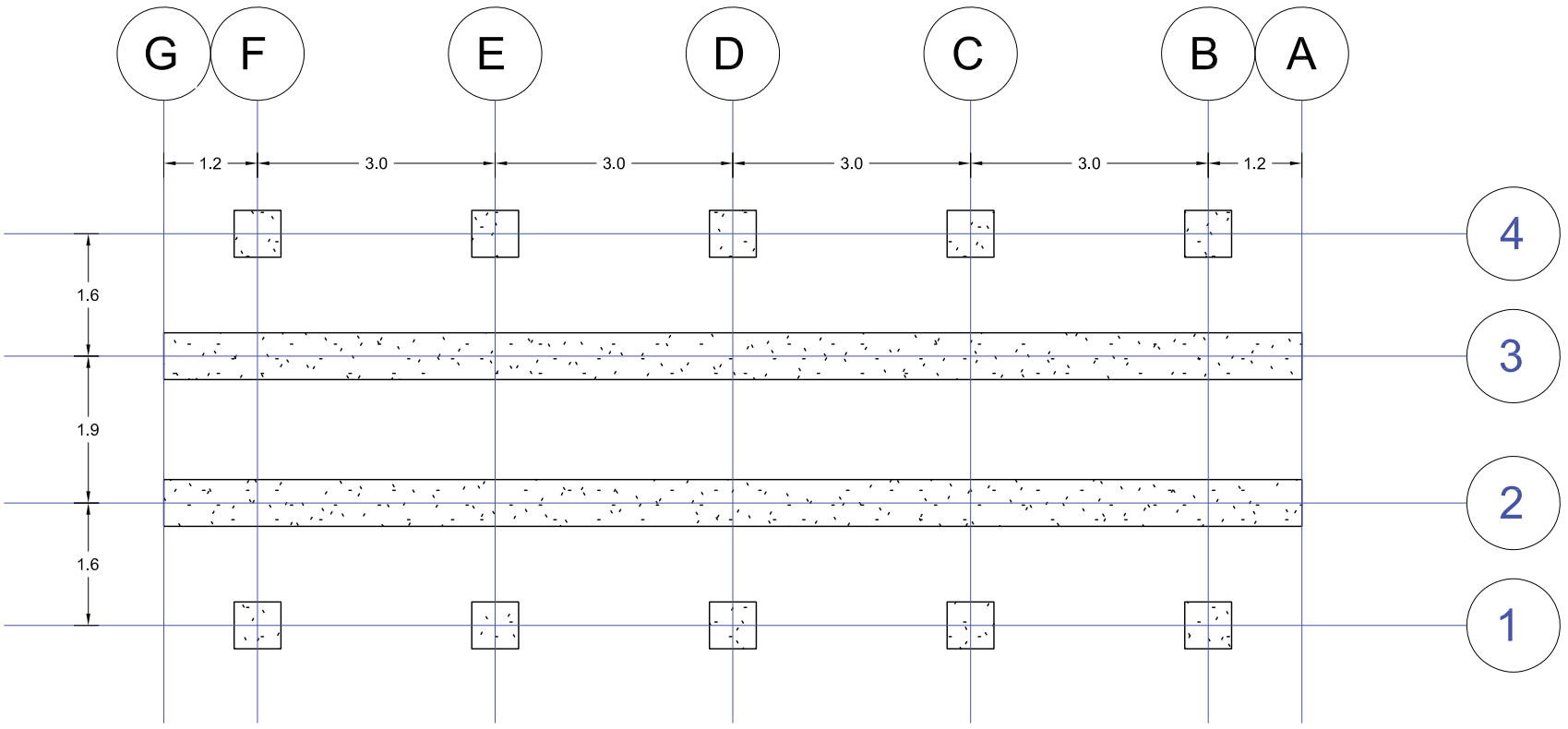

Solar system: Foundation Plan

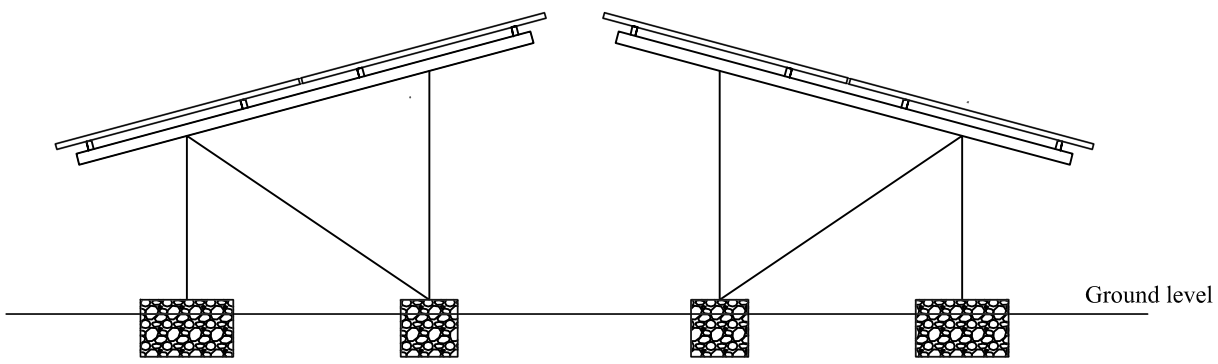

Solar system: Section/elevation

L= 20cm
B= 20cm
D=50cm

L= 30cm
B= 20cm
D=50cm

use 2" GI pipes

ACTIVITY	FOUNDATION PLAN		DESIGNED BY	PROJECT	DATE	
SOLAR FOUNDATION			ENG. ABDI MURUQLIQE	FD	20/11/2026	
CLIENT-	DRAWING NO.	SCALE	DRAWN BY	CHECKED BY	REVISION	
QALOCATO COMMUNITY	01	1:100	ENG. MURUQ MoWD Somaliland	itus	00	

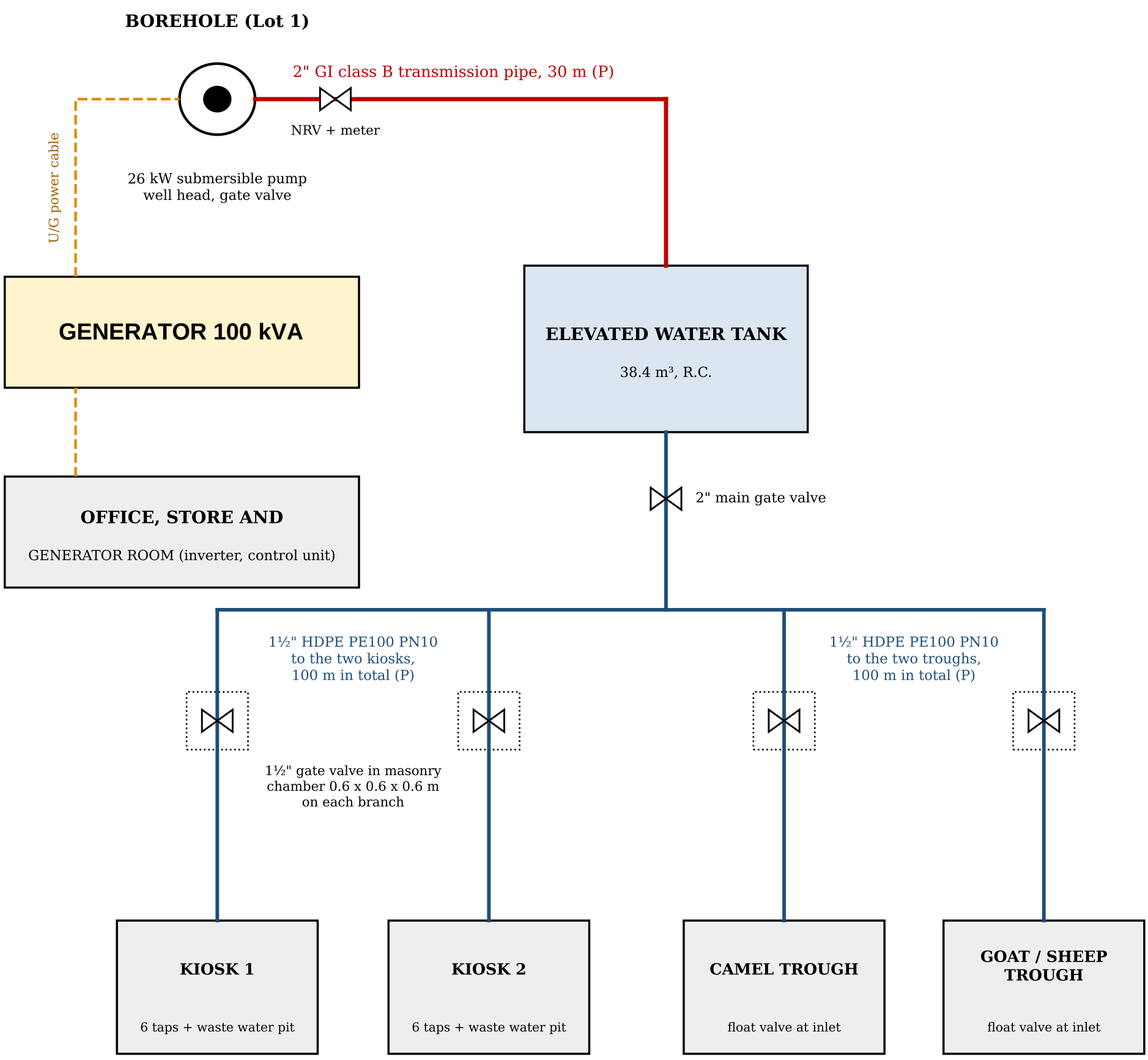

LEGEND

- 2" GI class B transmission pipe (borehole to tank)
- 1½" HDPE PE100 PN10 distribution pipe
- Underground power cable
- Gate valve (in chamber on branch lines)

TYPICAL PIPE TRENCH

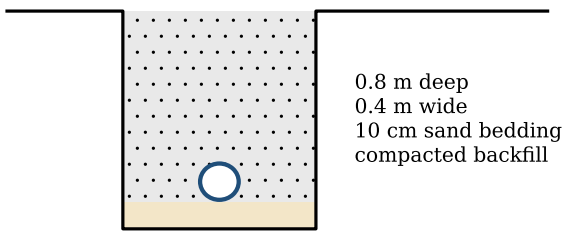

LOT 2: SITE LAYOUT AND PIPELINE SCHEMATIC – GADOON VILLAGE

Schematic – not to scale. Pipe lengths marked (P) are provisional and will be measured on site once the positions are fixed.

ACTIVITY	TITLE	DESIGNED BY	PROJECT	DATE
PIPELINES, VALVES AND FITTINGS	**LOT 2: LAYOUT PLAN**	**ENG. ABDI MURUQLIQE**	**Sustainable Access to Water for Rural Communities**	**20/11/2026**
CLIENT	DRAWING NO.	SCALE	CHECKED BY	REVISION
QALOCATO COMMUNITY	**07**	**NOT TO SCALE**		**00**